DIMNS MARKED DENOTES (S) SAFETY/REGULATION (F) CRITICAL FIT/FUNCTION (M) MAJOR FIT/FUNCTION (M2) MINOR FIT/FUNCTION

Ø 'C'	PLATING THICKNESS (AFTER POST CHROME GRINDING)	PLATING THICKNESS (BEFORE POST CHROME GRINDING)	FINISH GRINDING Ø	MODEL
Ø10.960~10.986	15 ±4μm (F)	18 ±4μm	Ø10.938~10.948	KWP

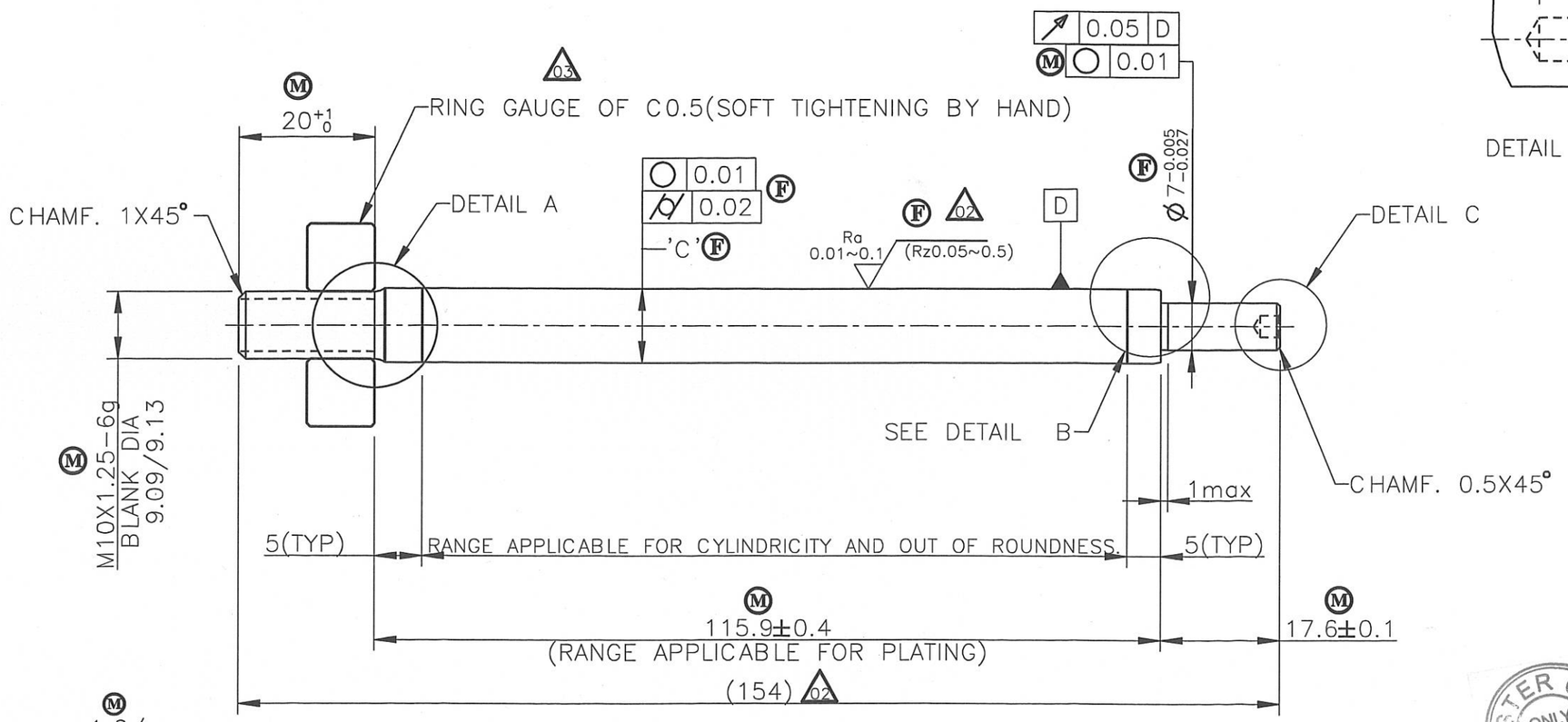

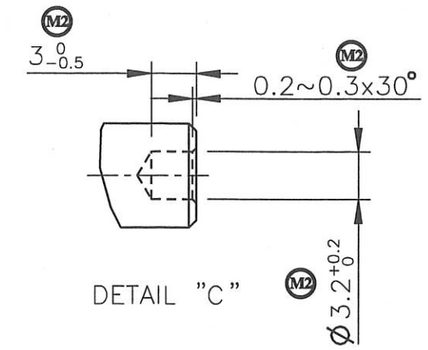

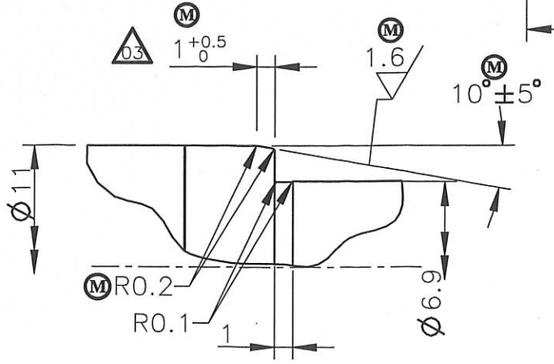

(PROFILE AT FINISH GRINDING)
DETAIL "B"

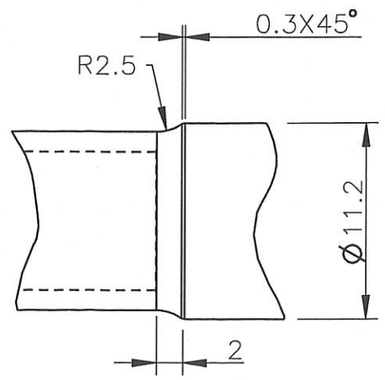

(PROFILE AT MACHINING STAGE)
DETAIL "A"

NOTE:

1. TO BE GROUND TO FINISH SIZE AFTER PLATING. MATERIAL REMOVAL 3~5μ ON DIAMETER.
2. (M) PLATING QUALITY SHALL BE AS PER GSP0103
3. (M) CHROME HARDNESS : HV 800MIN. / 50gms LOAD.
4. (M) CORROSION RESISTANCE AND OTHER QUALITY CHECK AS PER GSP0103.REFER ANNEXURE 1,HEADING HONDA SPECIFICATION(REFERENCE HESD2011−99) FOR CUSTOMER ACCEPTANCE CRITERIA.
5. MUST BE NO CHATTER, SCRATCH,ABRASION AND BRUSIE ON SURFACE OF Ø11
6. MUST BE NO PIN HOLE, ROUGH SURFACE AND BLISTER AFTER PLATING.
7. DIMENSIONS WITHIN () ARE ONLY FOR REFERENCE & NOT FOR INSPECTION. 02

DATE	REV	ALTERATION	E.C.N.NO
01.07.16	03	DIM 1+0.5 WAS 1±0.5 AT FINISH GRINDING STAGE.RING GAUGE OF C0.5 USED	47/'16
07.06.16	02	SURFACE ROUGHNESS VALUE UPDATED. REF DIM 154 WAS 153.5. NOTE 7 ADDED RING GAUGE UPDATED IN PLACE OF NUT	31/'16
31.10.15	01	CORROSION RESISTANCE STD MENTIONED.	32/'15

SUPERSEDES :--

GENERAL TOLERANCE ASPER : -PE/GT/001

DESIGN SOURCE REF.

RELEASE FOR: ☐ COSTING ☐ PROTOTYPE ☐ OTS ☐ PRE-PRODUCTION ■ PRODUCTION

GABRIEL INDIA LTD.

SCALE	SHEETS	FINISH:	MASS:
1:1	1 /1	HARD CHROME PLATING(MFiCr1)	103 gram

DRAWN BY: R.Yogesh DATE: 14/10/16

CHECKED BY: DATE: 14/10

APPROVED BY: DATE: 14/10/16

NAME:- PISTON ROD

MATERIAL:- (S) BAR−3404010−AS.PER−GP136−5

PART NO:- 34040395-5 REV. 03

ALL DIMENSIONS ARE IN MM. | NO MANUAL ALTERATION | DO NOT SCALE | IF IN DOUBT PLEASE ASK | SIZE : A3

MODEL : HONDA−KWPJ

FILE ARCHIVE LOCATION: Dev projects\Honda\KWP\KWPJ\Drawings & Model\

CONFIDENTIAL: THIS DRAWING AND THE INFORMATION THEREIN ARE THE PROPERTY OF GABRIEL INDIA LTD., AND SHALL NOT BE REPRODUCED, COPIED RECORDED IN ANY MEDIA, USED FOR ANY OTHER PURPOSE OR DELIVERED AND/OR DISCLOSED TO ANY THIRD PARTY WITHOUT WRITTEN CONSENT OF GABRIEL.

MASTER COPY ONLY IF RED